Best Sale FAG 24060 SPHERICAL ROLLER BEARINGS

Best Sale FAG 24060 bearing with Factory Price are widely used in industrial drive, agriculture, compressors, motors and generators, construction, industrial fan, industrial transmission and other fields. Best Sale FAG 24060 bearing with Factory Price can ensure high quality for more than 80% raw material of Best Sale FAG 22216-E1 bearing with Factory Price provided by the steel plant.Explorer series bearing of Best Sale FAG 24060 bearing with Factory Price are better than any brand bearings currently in bearing performance , lifetime, design, and the use of performance. Explorer series bearings of Best Sale FAG 24060 bearing with Factory Price have more advantages ,such as higher meet rated , lower noise, reducing warranty costs greatly, increasing running time of the machine .

Specification:

Inside Diameter(d):	460 mm
Outside Diameter(D):	160 mm
(B)Bearing Width:	4 mm
(Cr)Dynamic Load Capacity:	2500000 N
(Cor)Static Load Capacity:	5200000 N
Bearing mass(kgs):	300 kg

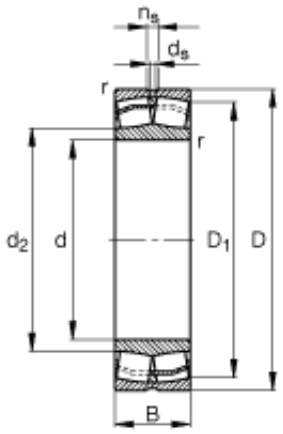

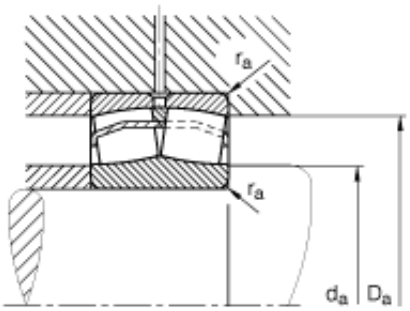

Industrial Bearings Solutions adheres to its company culture and core values as quality-oriented, pace-driven, honesty in mind and staff-basd .It offers high-quality products and service irrespective of distance for customers in worldwide and contributes to the sustainable development of the company and society.

FAG 24060-B-K30-MB Self-aligning roller bearing has two running rollers, mainly bearing radial load and axial load of both directions. Its high capacity of radial load is particularly suitable for work under heavy load or vibration load, but cannot bear pure axial load.

Wecome to contact with us if you are interested in FAG 24060.
Contact name:Dani
Skype:danaexdl

Tel: 0065 3159 1338
Email: admin@slewing-bearings.org